# *AZUM009*

| HEAT NO. | NO. | ITEM | MATERIAL | SIZE 1 | SIZE 2 | THICKNESS 1 | THICKNESS 2 | TYPE | Q'TY (NO.EA) | WEIGHT (KG) UNIT(NO.EA) | WEIGHT (KG) TOTAL | REMARK |
|---|---|---|---|---|---|---|---|---|---|---|---|---|
| | 1 | PIPE-SMLS | API 5L-B PSL.1 | 10" | | S/20 | | | 241 | 41.8 | 10.1 | - |
| | 2 | PIPE-SMLS | API 5L-B PSL.1 | 10" | | S/20 | | | 5855 | 41.8 | 244.7 | - |
| | 3 | 90D LR ELBOW | A234-WPB | 10" | | S/20 | | BW | 1 | 25.0 | 25.0 | - |
| | 4 | PAD PLATE(1-06) | A36 | 292 | 270 | PL6 | | | 1 | 3.7 | 3.7 | 00GMA05BR001_UAY00Y-A1-SP001 |
| | 5 | PAD PLATE(1-06) | A36 | 292 | 270 | PL6 | | | 1 | 3.7 | 3.7 | 00GMA05BR001_UAY00Y-A1-SP002 |
| | | | | | | | | | TOTAL WT (KG) | 287.2 | END TO END (MM) | 6287 |

PREHEAT CHECK(Min. °C)

Dimensional & Visual Inspection

☐ Accept ☐ Reject

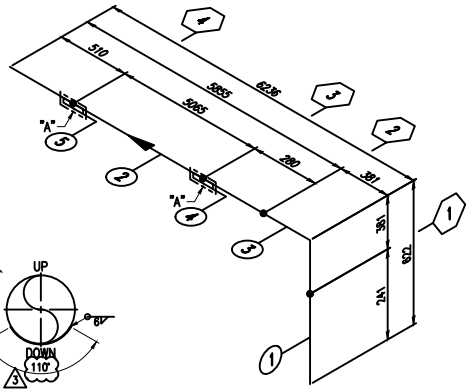


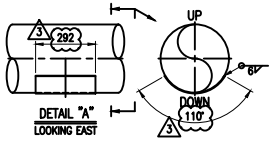


DETAIL "A"
LOOKING EAST

NOTES
1. SEE FABRICATION STANDARD DOCUMENT NO.AZU-FAB-STD-001 FOR SPOOL FABRICATION.
2. ALL DIMENSIONS ARE IN MILLIMETERS UNLESS OTHERWISE SPECIFIED.
3. ALL BUTTWELDINGS AND O-LET WELDINGS ARE FULL PENETRATION WELD.
4. FFW=FIELD FITTED WELD
5. ⊕ : ORIENTATION OF LONGITUDINAL WELD SEAM FOR WELDED PIPE

| REV. | DATE | DESCRIPTION | PREPARED | CHECKED | REVIEWED | APPROVED |
|---|---|---|---|---|---|---|
| 3 | 2025.02.05 | REVISED AS PER MARKED | J.G.LIM | J.S.KIM | G.J.KANG | G.H.CHO |
| 2 | 2025.01.13 | REVISED AS PER MARKED | J.G.LIM | J.S.KIM | G.J.KANG | G.H.CHO |
| 1 | 2024.12.24 | REVISED AS PER MARKED | J.G.LIM | J.S.KIM | G.J.KANG | G.H.CHO |
| 0 | 2024.12.10 | FIRST ISSUE | J.G.LIM | J.S.KIM | G.J.KANG | G.H.CHO |

| | | | | |
|---|---|---|---|---|
| APPLICABLE CODE | | ASME B31.1(2022) | CODE JURISDICTION | NBIP |
| DESIGN | PRESS. | 8.5 bar (g) | INSULATION(Y/N) | N |
| | TEMP. | 60 °C | END BEVEL TYPE | A |
| COATING | | 36-21-00-PRO-MM-0002-001 | STAMP(Y/N) | N |
| HYDROSTATIC TEST(Y/N) | | N | TEST PRESSURE | - bar (g) |

| WELD TABLE | | | | | NDE TABLE | | | | | | | | WPS NO. | REMARK |
|---|---|---|---|---|---|---|---|---|---|---|---|---|---|---|
| JOINT NO. | MAT'L | SIZE | THK. | WELD TYPE | RT | UT | MT | PT | VT | HT | PMI | PWHT (Y/N) | | |
| 1 | C/S | 10" | 6.35T | BW | 100% | - | - | - | 100% | - | - | N | SH-0101-GF-10 | - |
| 2 | C/S | 10" | 6.35T | BW | 100% | - | - | - | 100% | - | - | N | SH-0101-GF-10 | - |
| 3 | C/S | 292X270 | 6.00T | FIL | - | - | - | - | 100% | - | - | N | SH-0101-GF-10 | - |
| 4 | C/S | 292X270 | 6.00T | FIL | - | - | - | - | 100% | - | - | N | SH-0101-GF-10 | - |

| WELD TABLE | | | | | NDE TABLE | | | | | | | | WPS NO. | REMARK |
|---|---|---|---|---|---|---|---|---|---|---|---|---|---|---|
| JOINT NO. | MAT'L | SIZE | THK. | WELD TYPE | RT | UT | MT | PT | VT | HT | PMI | PWHT (Y/N) | | |

EXPLANATION FOR WELD TABLE AND NDE TABLE
RT=RADIOGRAPHIC EXAMINATION, UT=ULTRASONIC EXAMINATION, MT=MAGNETIC PARTICLE EXAMINATION, PT=LIQUID PENETRATION EXAMINATION, VT=VISUAL EXAMINATION, HT=HARDNESS TESTING, PMI=POSITIVE MATERIAL IDENTIFICATION,* "t": NOMINAL WALL THK., MP*: MINIMUM WALL THK.
WELD TYPE: BW=BUTT WELD, O-LET= BRANCH WELD(WELDOLET, SOCKOLET, ...), SW=SOCKET WELD, GW=GROOVED(OR W/ FILLET) WELD, FIL=FILLET WELD, SEAL=SEAL WELD, TACK=TACK WELD, THRD=THREADED JOINT, HOLE= HOLE WITHOUT WELDING(OT HOLE, ...), - = NO MAIN WELDING

| PARTS | A | MAT'L INSP.(M/K,C/T) | B | FIT-UP | C | WELDING | D | PWHT | E | NDE | F | FINAL INSP. |
|---|---|---|---|---|---|---|---|---|---|---|---|---|
| PD | H | | H | | H | | H | | | | H | |
| QC | H | | H | | H | | H | | H | | H | |
| CUSTOMER | | | | | | | | | | | | |
| RECORD NO. | | | | | | | | | | | | |

Project: UTE Azulão 950 MW

Customer: elecnor

Manufacturer: SEONGHWA

Title: PREFABRICATED PIPE SPOOL DRAWING
WASTE WATER SYSTEM

| | | | |
|---|---|---|---|
| FAB. ISOMETRIC DRAWING NUMBER | 00GMA05BR001_UAY00Y-A1 | SCALE | NONE |
| | | SHEET | 1/1 |
| SPOOL DRAWING NUMBER | 00GMA05BR001_UAY00Y-A1_SP-001 | SERIAL NUMBER | AZUM009 |

A4 (210 x 297mm/mm)